ABOVE ALL
www.AboveAllLighting.com

Project Name_____
Product Code_____
SKU No._____
Memo_____
Data_____

LED MOON SERIES POST TOP

PRODUCT DESCRIPTION

The moon series has the high-performance solution for the most demanding applications within a unique design. With different precision refractive optical lens and an easy-install design, it can be used in many applications such as pedestrian street, factory, schools, garden, courtyard, hotel, parking lot, public parks etc.

FEATURE

- Easy and convenient for installation
- Light weight design and low EPA minimize pole load
- Die-cast aluminum housing and excellent thermal management
- IES distribution Types II, III & V for various applications
- Tempered glass lens doesn't fade and discolor
- Muti-level motion sensor, photocontrol & 3/5/7 PIN NEMA receptacle for option

SPECIFICATION

Max. Weight: 16.54 lbs

Effective Projected Area (EPA): 0.7ft²

ELECTRICAL SYSTEM

- Input Voltage: 120-277VAC/347V/480V
- 50/60Hz
- 0-10V dimming for 35W, 50W and 75W; 1-10V dimming for 100W and 135W
- Operating temperature range: -40-104˚F (-40-40˚C)
- Power Factor: > 0.9 at full load
- Total Harmonic Distortion: < 20% at full load
- Integral 10KA surge suppression protection standard

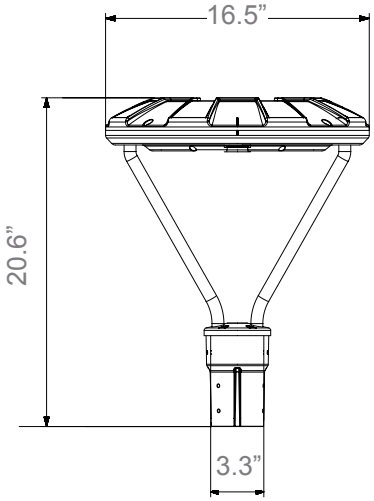

PERFORMANCE

CRI

70+

CCT

3000K、4000K、5000K

Projected Lifetime

L70 - 109,000 Hours

Working Temperature

-40-104˚F (-40-40˚C)

Certifications

- **cETLus conforms to UL Std. 1598 Cert. to CSA Std. C22.2 No.250.0**
- **IP66 rated**
- **DLC qualified***
- **RoHS compliant**

*** If find some configurations are not DLC listed please contact customer service.**

1501 Industrial Way N,
Toms River, NJ 08755
©2019 ABOVE ALL Lighting, Inc. All rights reserved
866-222-8866
info@abovealllighting.com
www.AboveAllLighting.com

Ordering Information

Example: MPT35501-MS-L3B-P1-V

Name	Watts	CCT	Voltage	Control	Installation	Distribution	Lens	Finish
MPT	**35** - 35W **50** - 50W	**30** - 3000K **40** - 4000K **50** - 5000K	**1** - 120-277V **2** - 347V [1] **6-** 120-347 [3]	**MS-L3B -** Wattstopper Sensor With Black L3 Lens [4] **MS-L7B -** Wattstopper Sensor With Black L3 Lens [4] **PC-** Photoelectric Control **7P-** 7-Pin PE Receptacle [5]	**P1** - 2 3/8" or 3" Tenon pole [6]	**V** - Type V **III** - Type III **II** - Type II	**Blank** - Glass Clear Lens [7] **GFL**- Glass Frosted Lens **PCL**-Polycarbonate Clear Lens [8] **PDL**-Polycarbonate Diffused Lens [8]	Standard **Blank** - Dark Bronze Optional* **AL** - Aluminum Silver **BK** - Black **WH** - White (See Notes)
	75 - 75W **100** - 100W **135** - 135W		**1** - 120-277V **2** - 347V [1] **3** - 480V [2] **6-** 347/480V [3]					

Notes:

1. Single voltage 347V is only used with photoelectric control.
3. 347/480 is available for 75W/100W/135W. If for 35W and 50W,it is 120-347V. Besides, 120-347V and 347/480V are not available for photoelectric control.
5. Shorting cap included.
7. Glass clear lens is standard. GFL, PCL and PDL may take long time - Please Ask Customer Service for Details.
2. Single voltage 480V is only used with photoelectric control.
4. Wattstopper sensor is not available for 120-347V and 347/480V.Black L3 lens is standard for 35W and 50W;Black L7 lens is standard for75W,100W and 135W. Please check the motion sensor manual for more information.
6. 4" OD round and square pole adapter is available for accessory.
8. Polycarbonate lens is IK10 rated.

* Standard Finish is Dark Bronze. Allow 4-6 weeks for optional finish. Additional charge will apply.

Accessories (Ordered separately & field installed)

90178
MPT-4RPA
4" OD Round Pole Adapter

90534
MPT-4SPA
4" Square Pole Adapter

90594
PT-WMB
Wall mount bracket for post top

90198
MPT-HSS
House side shield for MPT/MLB

Wattage Selector Option (Field Adjustable)

Wattage Selector: Luminaire equipped with the Wattage Selector can be dajusted by different percent of wattages in the field to reduce total lumen output. Use chart below to estimate reduction in lumen output desired.

Dimming Level / Wattage (W)	100%	80%	60%	40%
35	35	28	21	14
50	50	40	30	20
75	75	60	45	30
100	100	80	60	40
135	135	108	81	54

Note: If need the Wattage Selector please contact Customer Service in advance.

System Wattage	Max THD (%)	Power Factor	Power Efficiency	Replaces/ Equiv.(MH)
35W	20	>0.9	93%	150W
50W	20	>0.9	93%	175W
75W	20	>0.9	93%	250W
100W	20	>0.9	93%	320W
135W	20	>0.9	93%	400W

1501 Industrial Way N,
Toms River, NJ 08755
©2019 ABOVE ALL Lighting, Inc. All rights reserved
866-222-8866
info@abovealllighting.com
www.AboveAllLighting.com

PHOTOMETRY

All published luminaire photometric testing performed to IESNA LM-79-08 standards by a NVLAP certified laboratory.

With Clear Lens

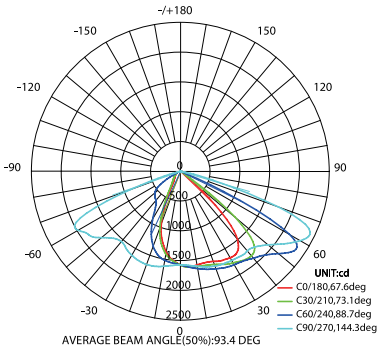

Type II

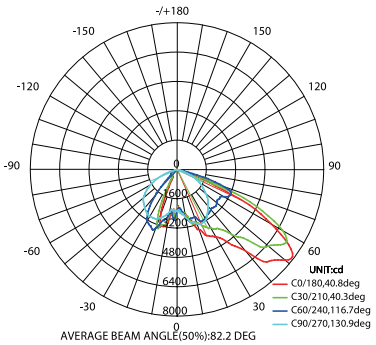

Type III

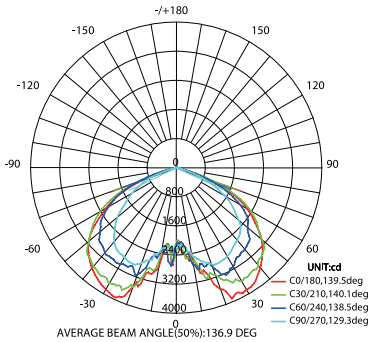

Type V

PERFORMANCE DATA

LUMEN OUTPUT

Lumen values are measured by third party certified laboratories performed in accordance with IESNA LM-79-08 as well as Lighting Facts listed.

With Clear Glass Lens

Nominal Watts	System Watts	Lumen Output (Post Top)	CRI	CCT	Dist. Type	LPW
35W	35W	4039lm	>70	5000K	Type V	115
50W	47.8W	5319lm	>70	3000K	Type III	111
75W	72.1W	8057.4lm	>70	5000K	Type III	111.8
100W	99.4W	11595lm	>70	5000K	Type V	116.7
135W	133W	16500lm	>70	5000K	Type V	124

Notes: 0.89 multiplier is for frosted glass lens.

Lumen Ambient Temperature (LAT) Multipliers

Use these factors to determine relative lumen output for average ambient temperature from -40-104˚F (-40-40˚C).

Ambient		
Celsius	Fahrenheit	Multiplier
0	32	1.02
10	50	1.01
20	68	1.00
25	77	1.00
30	86	1.00
40	104	0.99

Projected LED Lumen Maintenance

Data references the extrapolated performance projections for the MT LED in a 77˚F ambient, (tested per IESNA LM-80-08 and projected per IESNA TM-21-11).

	100W (351B)			
Operating Hours	10,000	16,000	29,000	109,000
Lumen Maintenance Factor	0.98(L98)	0.96(L96)	0.92(L92)	0.70(L70)

	75W (5630)			
Operating Hours	11,000	16,000	27,000	97,000
Lumen Maintenance Factor	0.98(L98)	0.96(L96)	0.92(L92)	0.70(L70)

1501 Industrial Way N,
Toms River, NJ 08755
©2019 ABOVE ALL Lighting, Inc. All rights reserved
866-222-8866
info@abovealllighting.com
www.AboveAllLighting.com

Reff: 20211123

BUG Rating

Performed to IESNA LM-79-08 standards by a NVLAP accredited laboratory

Model	BUG Rating
MPT35301-II	B1-U2-G0
MPT35401-II	B1-U2-G0
MPT35501-II	B1-U2-G1
MPT35301-III	B2-U1-G1
MPT35401-III	B1-U2-G0
MPT35501-III	B2-U1-G1
MPT35301-V	B2-U1-G1
MPT35401-V	B2-U2-G1
MPT35501-V	B2-U1-G1
MPT50301-II	B2-U2-G1
MPT50401-II	B2-U2-G1
MPT50501-II	B2-U2-G1
MPT50301-III	B2-U2-G1
MPT50401-III	B2-U2-G1
MPT50501-III	B2-U2-G1

Model	BUG Rating
MPT50301-V	B2-U2-G1
MPT50401-V	B2-U2-G1
MPT50501-V	B2-U2-G1
MPT75301-II	B2-U3-G1
MPT75401-II	B2-U3-G1
MPT75501-II	B2-U3-G1
MPT75301-III	B2-U2-G2
MPT75401-III	B2-U3-G1
MPT75501-III	B2-U2-G2
MPT75301-V	B3-U2-G2
MPT75401-V	B3-U3-G1
MPT75501-V	B3-U3-G1

Model	BUG Rating
MPT100301-II	B3-U3-G1
MPT100401-II	B3-U3-G1
MPT100501-II	B3-U3-G1
MPT100301-III	B3-U2-G2
MPT100401-III	B3-U3-G2
MPT100501-III	B3-U2-G3
MPT100301-V	B3-U2-G2
MPT100401-V	B3-U3-G3
MPT100501-V	B3-U2-G3
MPT135501-P1-II	B3-U3-G1
MPT135501-P1- III	B3-U3-G2
MPT135501-P1- V	B3-U3-G3

Multi-level Motion Sensor

120-277V Photocontrol

480V Photocontrol

Wall Mount Bracket

Warranty

Five year limited warranty. Full warranty terms located at www.abovealllighting.com/warrantystatements.

Note:

Specifications subject to change without notice.

1501 Industrial Way N,
Toms River, NJ 08755
©2019 ABOVE ALL Lighting, Inc. All rights reserved

866-222-8866
info@abovealllighting.com
www.AboveAllLighting.com