PILLAR SQUARE LED BOLLARD
Instructions Manual

SAFETY INSTRUCTION

READ CAREFULLY BEFORE INSTALLING FIXTURE. PLEASE KEEP THIS MANUAL FOR FUTURE USE.
Fixtures must be wired in accordance with the National Electrical Code and all applicable local codes. Proper grounding is required for safety.
THIS PRODUCT MUST BE INSTALLED IN ACCORDANCE WITH THE APPLICATION CODE BY A PERSON FAMILIAR WITH THE CONSTRUCTION AND OPERATION OF THE PRODUCT AND THE HAZARDS INVOLVED.
MAKE CERTAIN POWER IS OFF BEFORE INSTALLING OR MAINTAINING FIXTURE.
CHECK THAT VOLTAGE IS COMPATIBLE WITH FIXTURE DRIVER. USE APPROVED CONNECTORS FOR ALL ELECTRICAL CONNECTIONS.

MAINTENANCE CAUTION

1. Review the wire connection before beginning, and make sure fixture is grounded properly.
2. For lighting controls, follow control instructions carefully.
3. Turn power off and wait for fixture to cool before performing maintenance.
4. Maintenance must be done by professionals.

WIRE CONNECTION

Universal Voltage permits operation at 120VAC thru 277VAC, 50 or 60 Hz.

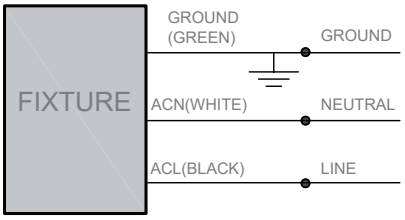

Make the following Electrical Connection:
a). Connect the voltage supply line to ACL in Black.
b). Connect the voltage supply Neutral to ACN in White.
c). Connect Green ground lead to the supply ground lead.

INSTALLATION

ACCESSORY PACK

WIRE NUT x 3

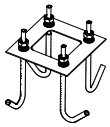
ANCHOR BOLTS x 1

L-TYPE WRENCH x 1

©2026 ABOVE ALL Lighting, Inc. All rights reserved.

Reff#: 20260330

WARNING
Risk of injury or damage. Make certain power is OFF before installing or maintaining fixture.

Installation Steps

1. Make sure the concrete base is suitable for the bollard load.
2. Install Anchor Bolts into concrete.
3. Ensure that conduit (customer supplied) exits concrete in the center of the anchor bolts.
4. Loosen the four Set Screws B with an L-type hex wrench, then remove the Bollard Base.
5. Place the Bollard Base over Anchor Bolts and tighten all the Nuts and Washers.
6. Be sure supply leads extend far enough to make wire connections between the luminaire cable and the external cable using wire connectors (by others).
7. Slide the Fixture over the Bollard Base.
8. Replace the four Set Screws B to secure the fixture to the Bollard Base.

Adjusting Power and CCT

1. Remove Set Screw A and pull out the upper part of the fixture. When pulling, protect the wires and do not damage them.
2. Adjust the DIP switches for Wattage and CCT to the desired settings.
3. Reinstall the fixture upper part.
4. Tighten Set Screw A.

NOTE

1. Wattage/CCT DIP Switch

Wattage	CCT
SP[1)]	**SW[2)]**
Selectable[1)]	Selectable[2)]
10W	3000K
15W	4000K
20W	5000K

Note:

1). 20W is the default setting.

2). 3000K is the default setting.

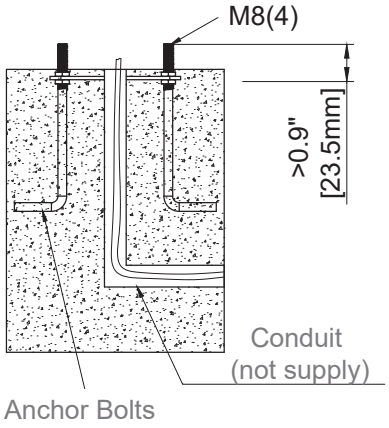

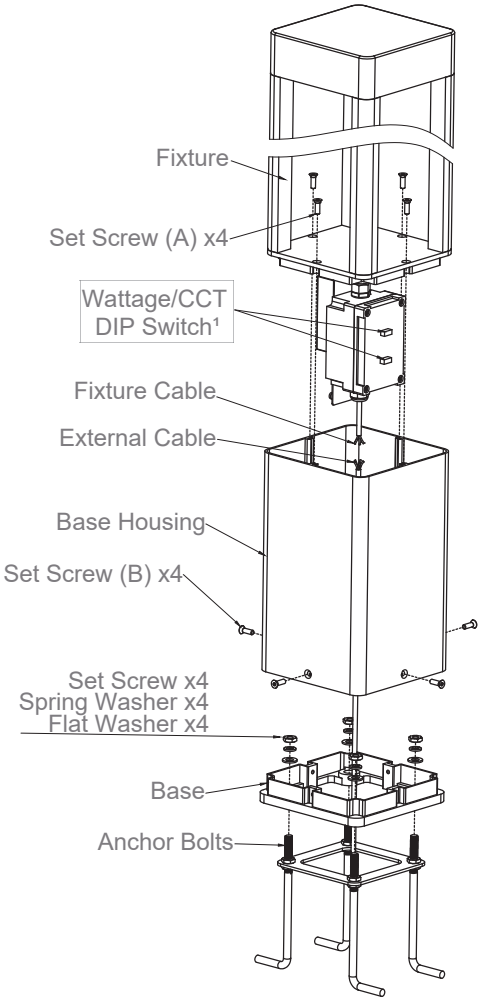

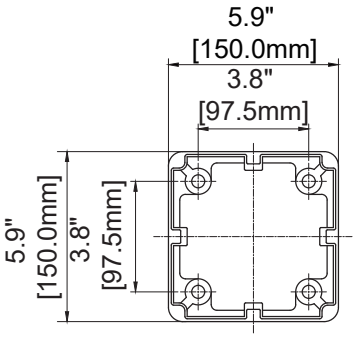

BASE PLATE

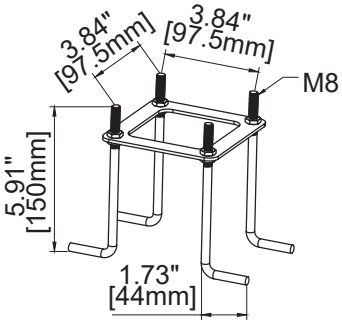

ANCHOR BOLTS

©2026 ABOVE ALL Lighting, Inc. All rights reserved.