# MACK LED BOLLARD MBD-WB

ABOVE ALL
www.AboveAllLighting.com

The MACK LED Bollard emphasizes a strong, ultra rectilinear design. It's fully shielded light source effectively contains upward light spill for safety and comfort of passers by. This bollard's overtly clean lines, with superior UV powder coating, quality die cast aluminum body, tempered safety glass lens, molded silicone gasket and stainless steel screws. This bollard is an excellent choice for walkways, entrances, promenades, plazas, courtyards, driveways, bridges, and landscaped areas.

## TECHNICAL DATA

| | |
|---|---|
| **Wattage** | 10W |
| **CCT** | 3000K, 4000K |
| | 3000K-DarkSky Approved |
| **Driver** | Non-Dimming is standard |
| | 0-10V Dimming is optional |
| **CRI** | 80 |
| **Input Voltage** | 120-277V, 50/60Hz |
| **Projected Lifetime** | L70-100,000 hours |
| **Operating Temp.** | -30°C to 40°C (-86°F to 104°F) |
| **Certifications** | cETLus |
| | RoHS compliant |
| | DarkSky Approved for CCT of |
| | 3000K and below |
| **Power Factor** | >0.9 @120Vac |
| **Harmonic Distortion** | <20% at full load |
| **IP Rating** | IP65 |

## FEATURES

- Fully shielded design.
- Die cast aluminum body.
- Wood texture finish color available.
- IP65 rated for wet location.

### Family Show_Mack Bollards

MBD

MBD-LB

MBD-STB

### Family Show_Mack Lin Pole Light

LIN


©2026 ABOVE ALL Lighting, Inc. All rights reserved.

## SPECIFICATION

### Dimension

**Side View**

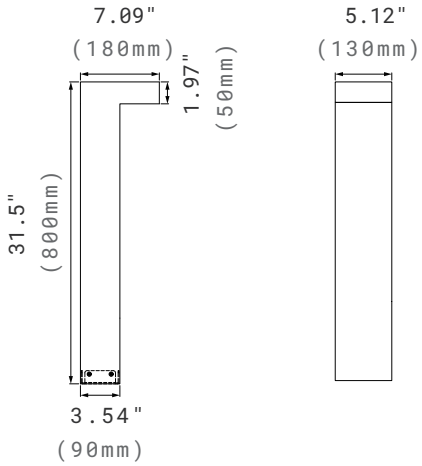


**Base Plate**

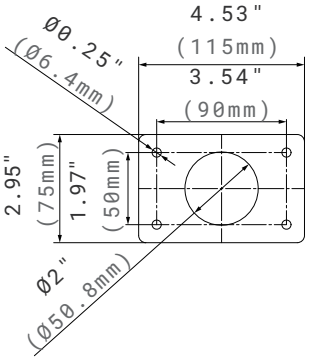


**Anchor Bolts**

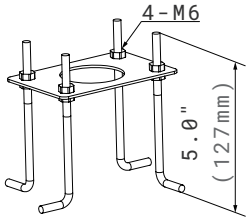


## ORDERING INFORMATION

### Standard Model

EXAMPLE: MBD32H-WB-10401-BK

| MBD | | | | | | | |
|---|---|---|---|---|---|---|---|
| **Series** | **Height** | **Base** | **Wattage** | **CCT** | **Voltage** | **Finish** | **Options** |
| **MBD**<br>Mack Bollard | **32H**<br>31.5”<br>Height | **WB** | **10**<br>10W | **30**<br>3000K<br>**40**<br>4000K | **1**<br>120-277V | **BK**<br>Black<br>*Wood Texture Optional[1] (Need Additional Charge)* | **BLANK**<br>Non-Dimming<br>**D**<br>0-10V Dimming Driver |

**NOTE:**

1. Black finish is standard. Wood texture finish and other optional finish colors are available at an additional charge. Please contact Customer Service for details.


©2026 ABOVE ALL Lighting, Inc. All rights reserved.

## ORDERING INFORMATION

**DarkSky-Approved Model**

EXAMPLE: MBD32H-WB-10301-BK

| MBD | | | | | | | |
|---|---|---|---|---|---|---|---|
| **Series** | **Height** | **Base** | **Wattage** | **CCT** | **Voltage** | **Finish** | **Options** |
| **MBD**<br>Mack Bollard | **32H**<br>31.5”<br>Height | **WB** | **10**<br>10W | **30**<br>3000K | **1**<br>120-277V | **BK**<br>Black<br>*Wood Texture Optional[1] (Need Additional Charge)* | **BLANK**<br>Non-Dimming<br>**D**<br>0-10V Dimming Driver |

**NOTE:**

1. Black finish is standard. Wood texture finish and other optional finish colors are available at an additional charge. Please contact Customer Service for details.

## WOOD TEXTURE OPTIONS

**LWTC-1/2-TP**

Half light wood texture color from the top of pole, and half black color from the bottom of pole.

**LWTC-2/3-TP**

2/3 light wood texture color from the top of pole, and 1/3 black color from the bottom of pole.

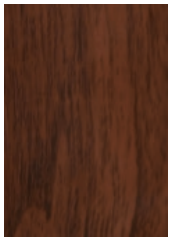

**DWTC-1/2-TP**

Half deep wood texture color from the top of pole, and half black color from the bottom of pole.

**DWTC-2/3-TP**

2/3 deep wood texture color from the top of pole, and 1/3 black color from the bottom of pole.

## ACCESSORIES (ORDERED SEPARATELY)

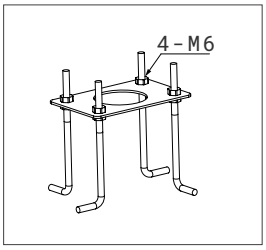


**ABMK-MBD-WB**

Anchor Bolts Mounting Kits.


©2026 ABOVE ALL Lighting, Inc. All rights reserved.

## PERFORMANCE DATA

Lumen values are measured by third party certified laboratories performed in accordance with IESNA LM-79-08 as well as Lighting Facts listed.

| Wattage | Lumen Output | AC Input 120V | CRI | CCT | LPW |
|---|---|---|---|---|---|
| 10W | 490LM | 0.08A | 80 | 3000K | 70 |

## BUG RATING TABLE

Performed to IESNA LM-79-08 standards by a NVLAP accredited laboratory.

| Model | BUG Rating |
|---|---|
| MBD32H_WB_10301_BK | B0-U2-G0 |

## WARRANTY

5 year limited warranty.

Specifications subject to change without notice.


©2026 ABOVE ALL Lighting, Inc. All rights reserved.