HOLLY RGB LED FLOOD LIGHT

ABOVE ALL
www.AboveAllLighting.com

The HOLLY LED Flood Light is a high-efficiency outdoor luminaire with a sleek, round housing design. With a variety of beam angle choices and a dynamic RGBTW blend (2700K -6500K), it provides endless possibilities for creating the perfect ambiance in any space. Constructed from die-cast aluminum, with a silicone rubber gasket and AkzoNobel powder coating, it ensures long-lasting durability in harsh outdoor environments.Rated IP66 and ±90° horizontally tiltable, along with various accessories, it is ideal for a wide range of installation applications.

PERFORMANCE DATA

Lumen values are measured by third party certified laboratories performed in accordance with IESNA LM-79-08 as well as Lighting Facts listed.

Watts	Delivered Lumen	CCT	CRI
26W	920lm	RGB+3000K	80
42W	1500lm	RGB+3000K	80
80W	2600lm	RGB+3000K	80
112W	2860lm	RGB+3000K	80

TECHNICAL DATA

Wattage	26W, 42W, 80W, 112W
CRI	80
CCT	2700K/3000K/4000K/5000K/ RGBW
Control	DMX512
Input Voltage	24VDC,120-277V
Operating Temp.	R26:-40°C~55°C (-40°F ~131°F)
	R42:-40°C~45°C (-40°F ~113°F)
	R80:-40°C~45°C (-40°F ~113°F)
	R112:-20°C~40°C (-4°F ~104°F)
Projected Lifetime	L70~100,000 Hours
Certifications	cETL
	RoHS compliant
Power Factor	>0.9 at full load
Harmonic Distortion	<20% at full load
IP Rating	IP66
IK Rating	IK08

FEATURES

- Heavy duty cast aluminum housing
- Tempered glass lens
- Multiple mounting mechanisms
- Various beaming angles
- Marine grade treatment available

©2026 ABOVE ALL Lighting, Inc. All rights reserved.

ORDERING INFORMATION

EXAMPLE: HOFL-R26-RGBW3024V-DMX-24-CN-BK-1.8FT

HOFL	R26	RGBW30	24V	DMX	24	CN	BK
1.Series	**2.Wattage**	**3.CCT**	**4.Voltage**	**5.Controls**	**6.Beam Angle**	**7.Mounting**	**8.Faceplate Finish**
HOFL	**R26** 26W **R42** 42W	**RGBW30** RGB and 3000K **RGBW40** RGB and 4000K	**24V** 24VDC[1]	**DMX** DMX512 enabled	**8** 8°[2] **15** 15° **24** 24° **40** 40° **60** 60° **15X30** 30X15°	**CN** Canopy cover **KNR** Knuckle with 1/2 threaded receptacle **KNS** Knuckle with 1/2 threaded stem **YK** Yoke	**BK** Black RAL9011 **BZ** Bronze RAL8019 *The following colors are available at an additional charge.*[1] **WH** White RAL9016 **GY** Gray RAL7012 **SL** Sliver RAL9006 **CC** Custom Colors (Provide RAL#)
	R80 80W **R112** 112W	**RGBW50** RGB and 5000K **RGBTW**[2] RGB and 2700K-6500K	**1** 120-277V				
	1.8FT **9.Cable Length**	**10.Options**					
	1.8FT* ** 1.8 FT cable is standard. Other cable lengths are available at an additional charge*	**BLANK** None **M** Marine ambient corrosion resistance					

NOTE:

1. R26 and R42 are 24V constant voltage. LED drivers can be chosen in the following accessory table or supplied by customer. R80 and R112 are 120-277V.
2. 8° is not available for RGBTW.

*Black or bronze finish is standard. Custom color is available at an additional charge.

*Standard cable length is 1.8FT. Other cable lengths are available at an additional charge.

©2026 ABOVE ALL Lighting, Inc. All rights reserved.

Housing Colors

Black(RAL9011) Gray(RAL7012) White(RAL9016) Mineral bronze Silver(RAL9006)

ACCESSORIES (Ordered separately and field installed)

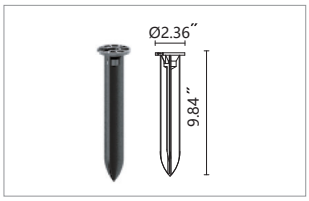

HOFL-GDSK-AL

Aluminum Ground stake
Max loading ≤10kg
Incapable in corrosive area.
Suggest to be used with CN.
Not suggested to be used for R80 and R112.

HOFL-TRSP-BK

Tree strap black Clamping area Ø 5.9"~11.9".
Not suggested to be used for R112.

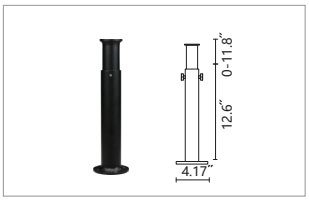

HOFL-ADJSM-BK

Black Adjustable Stem.
Fixed stem height: 12.6"
Adjustable extension: 0–11.8"Total height range: 12.6" to 24.4".Suggest to be used with CN.

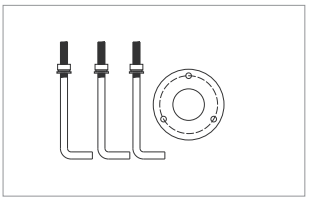

ADJSM-ABMK

Anchor Bolts Mounting Kits for Adjustable Stem.

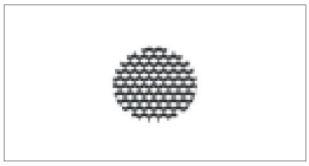

HOFL-HCL-50

Aluminum Honeycomb louver, Dia 50
for R26/R42/R80

HOFL-HCL-62

Aluminum Honeycomb louver,Dia 62
for R112

HOFL-CCL50

Polycarbonate Concentric louver
Dia 50, for R26/R42/R80

HOFL-CCL62

Polycarbonate Concentric louver
Dia 62, for R112

HOFL-FV-26-BK

Full visor black
Dia 5.31"x3.94"

HOFL-FV-42-BK

Full visor black
Dia 7.28"x5.12"

HOFL-FV-86-BK

Full visor black
Dia 8.86"x6.3"

HOFL-FV-120-BK

Full visor black
Dia 10.83"x7.48"

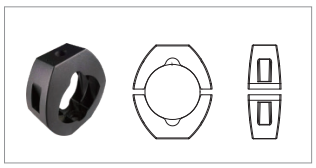

HOFL-PCP-4-BK

Pole Clamp for Ø4" pole, fits 1 or 2 fixtures, black.
Suggest to be used with KNS.

HOFL-PCP-5-BK

Pole Clamp for Ø5" pole, fits 1 or 2 fixtures, black.
Suggest to be used with KNS.

XLG-100-24-A

100W led driver
input voltage: AC100-305V,
output voltage: 24V DC

XLG-150-24-A

150W led driver
input voltage: AC100-305V,
output voltage: 24V DC

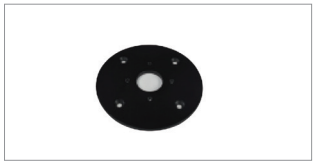

JBOX-PLATE01-BK

4" recessed
Electrical box mounting plate black for R26/R42.
Suggest to be used with CN.

©2026 ABOVE ALL Lighting, Inc. All rights reserved.

MOUNTING

Canopy Cover

Yoke

Knuckle with NPT 1/2" threaded receptacle

Knuckle with NPT 1/2" threaded stem

Ground stake

Pole clamp

Tree strap

PHOTOMETRY

All published luminaire photo metric testing performed to IESNA LM-79-08 standards by a NVLAP certified laboratory.

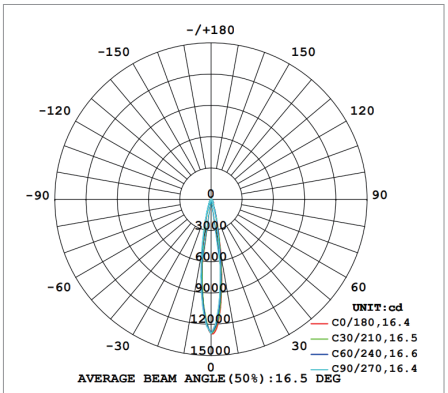

15°/42W

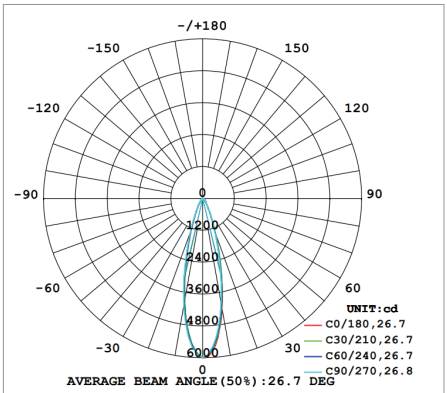

24°/42W

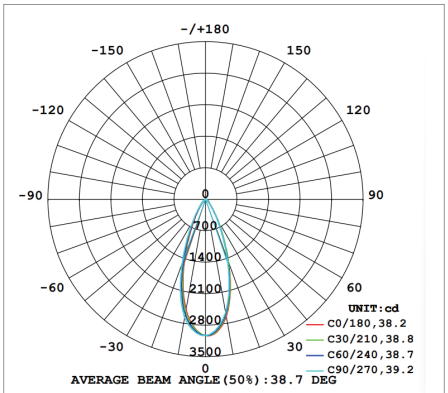

40°/42W

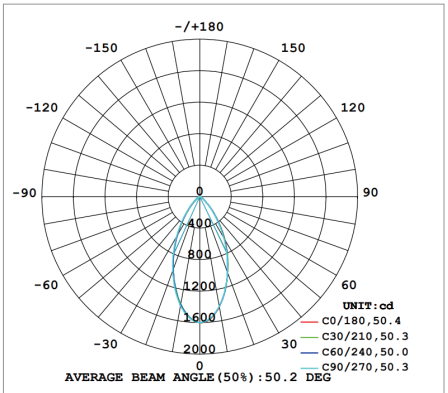

50°/42W

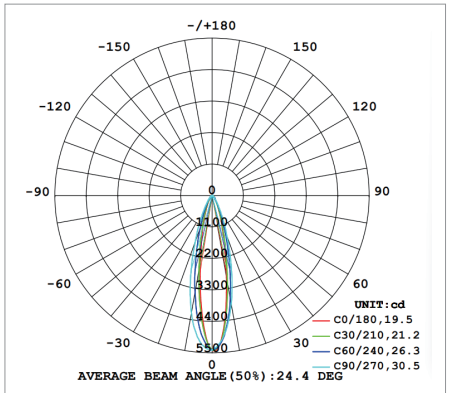

15°x30°/42W

©2026 ABOVE ALL Lighting, Inc. All rights reserved.

DIMENSION

With Canopy Cover

26W

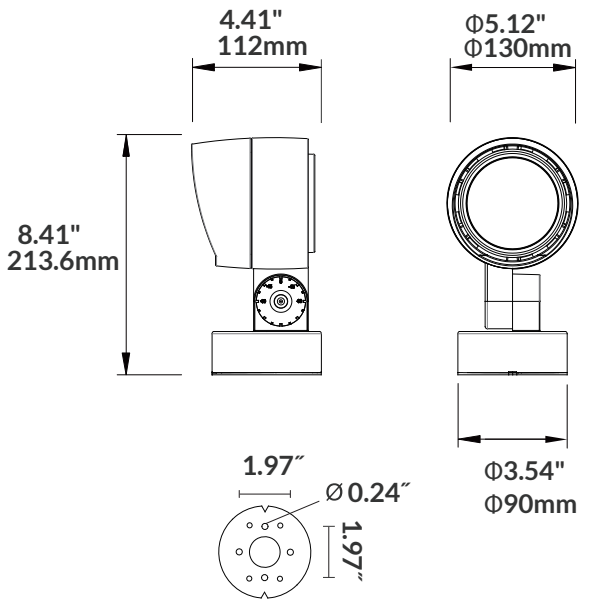

42W

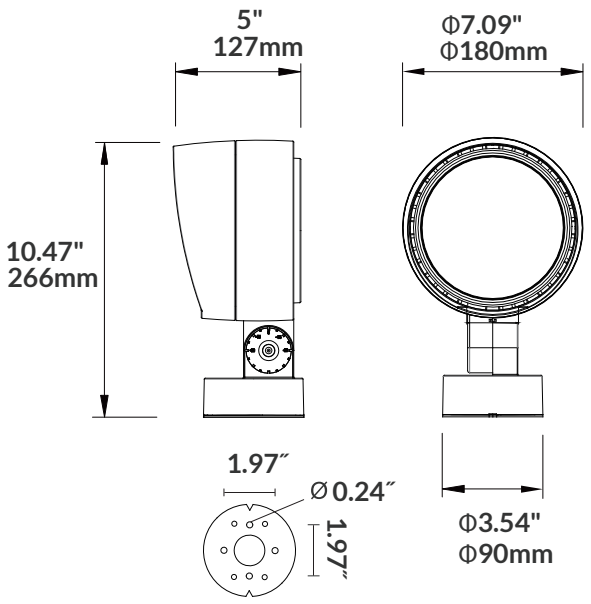

80W

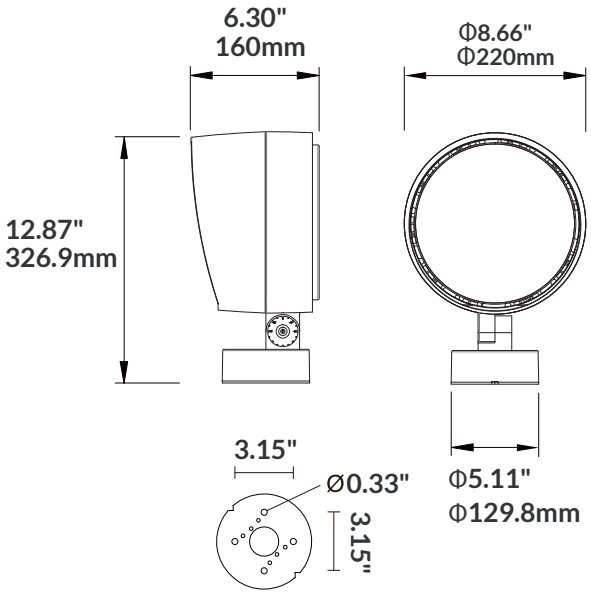

112W

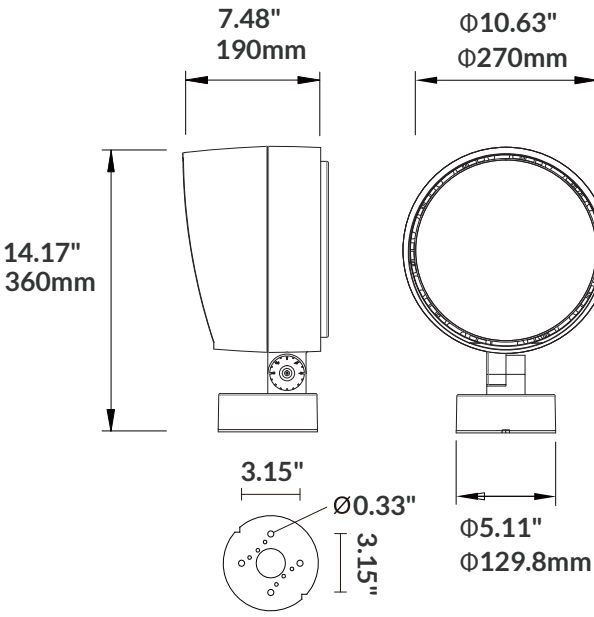

©2026 ABOVE ALL Lighting, Inc. All rights reserved.

DIMENSION

Yoke

26W

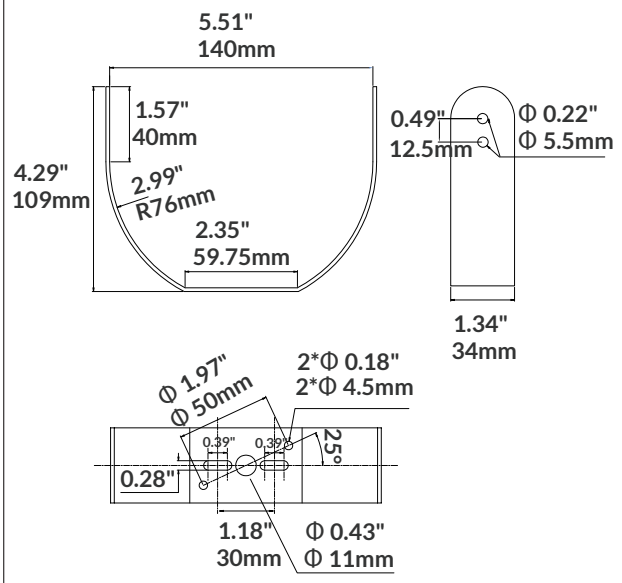

42W

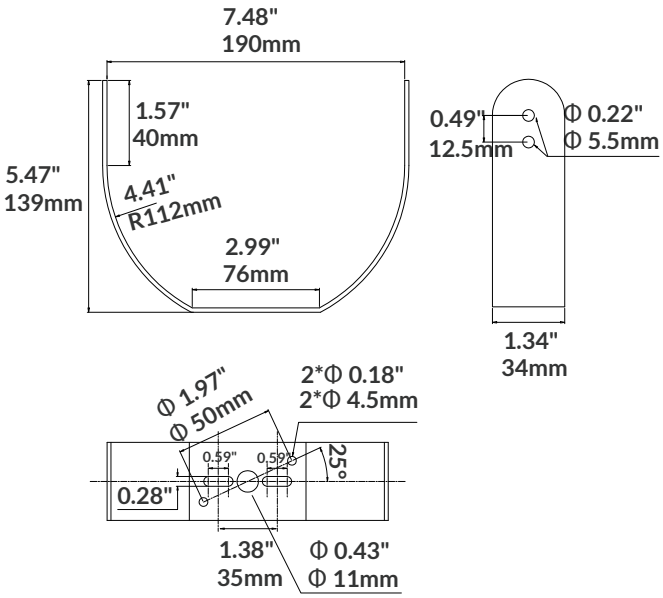

80W

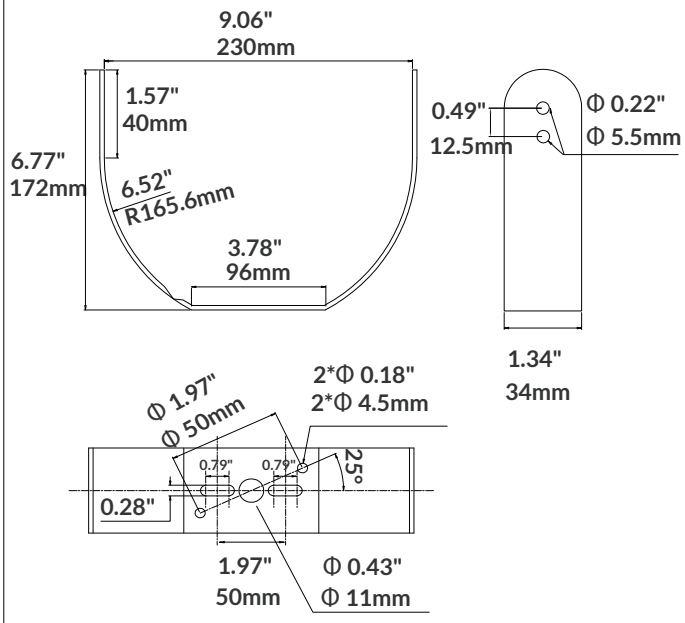

112W

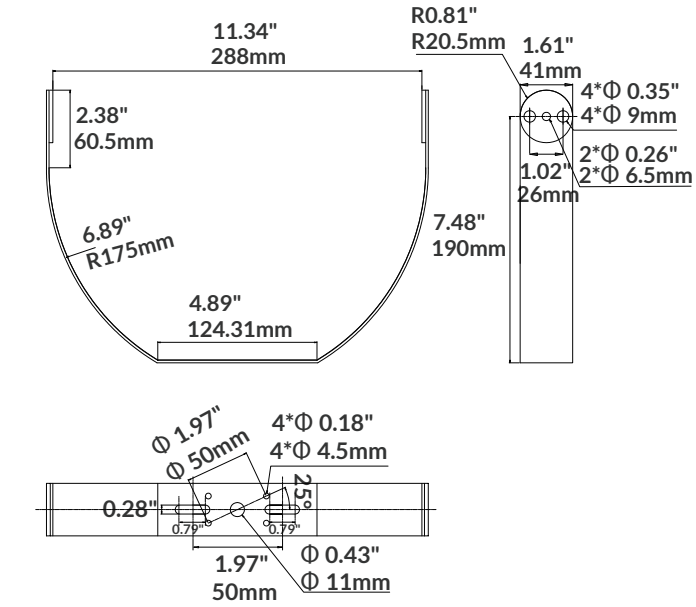

©2026 ABOVE ALL Lighting, Inc. All rights reserved.

DIMENSION

Knuckle with 1/2" threaded receptacle

26W

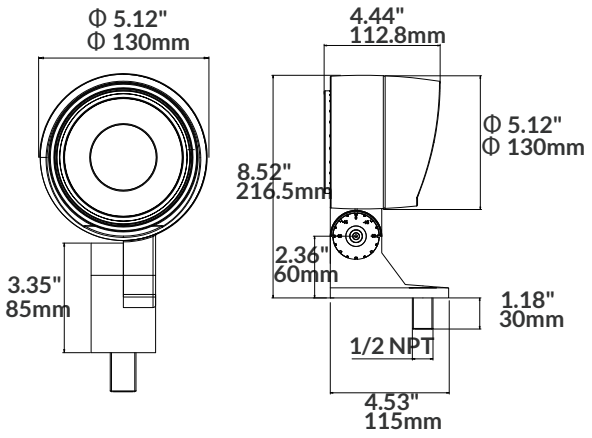

42W

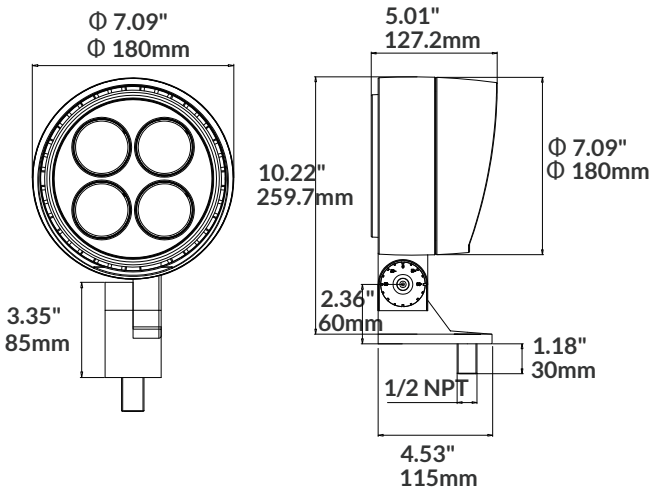

80W

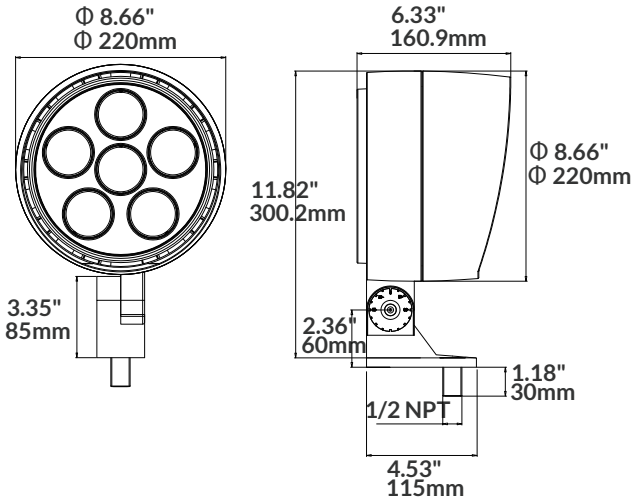

112W

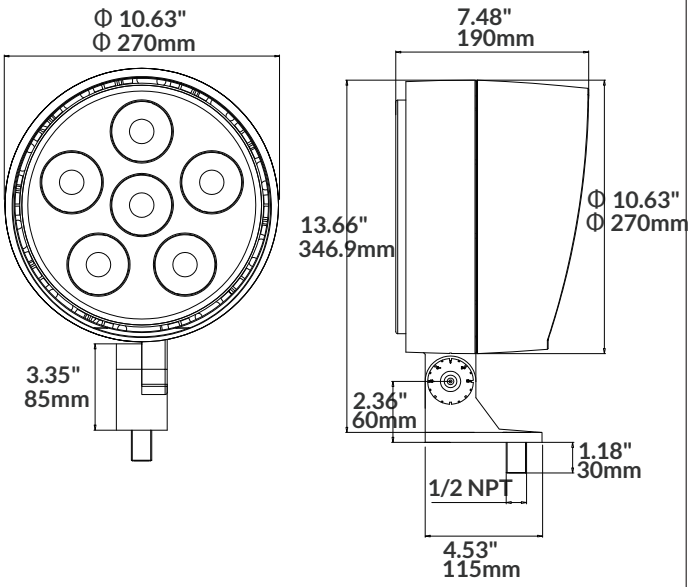

©2026 ABOVE ALL Lighting, Inc. All rights reserved.

DIMENSION

Knuckle with NPT 1/2"threaded stem

Ref#: 20260929

26W

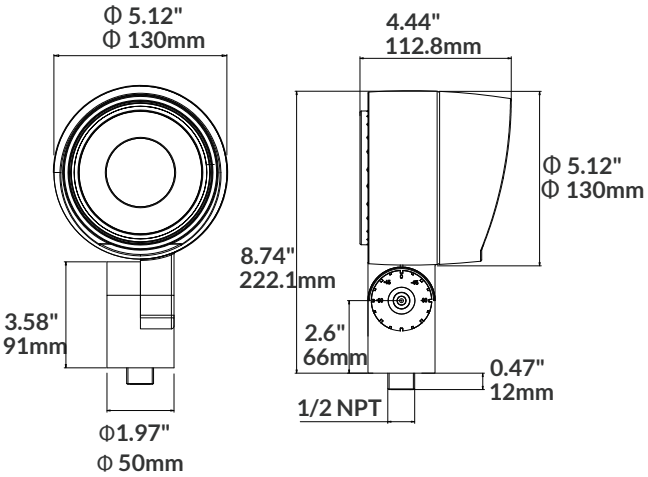

42W

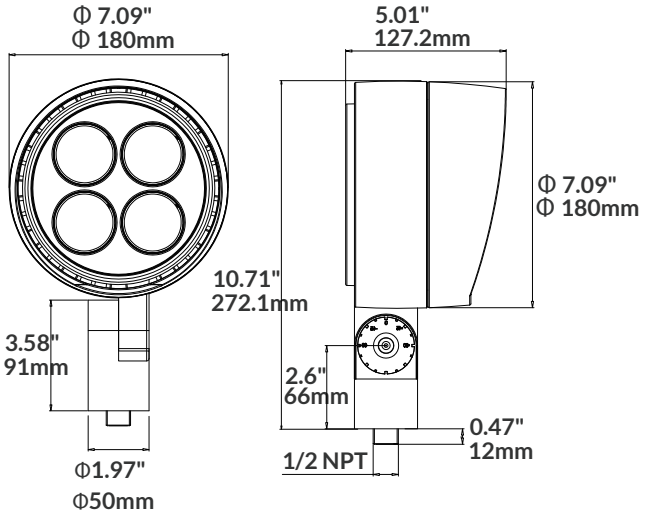

80W

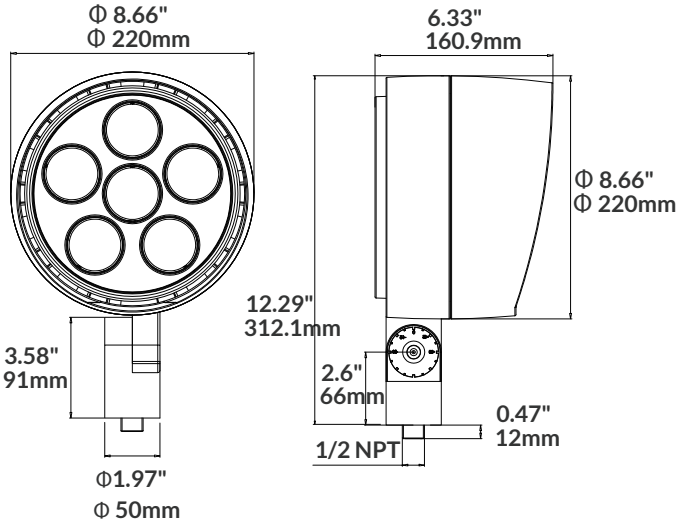

112W

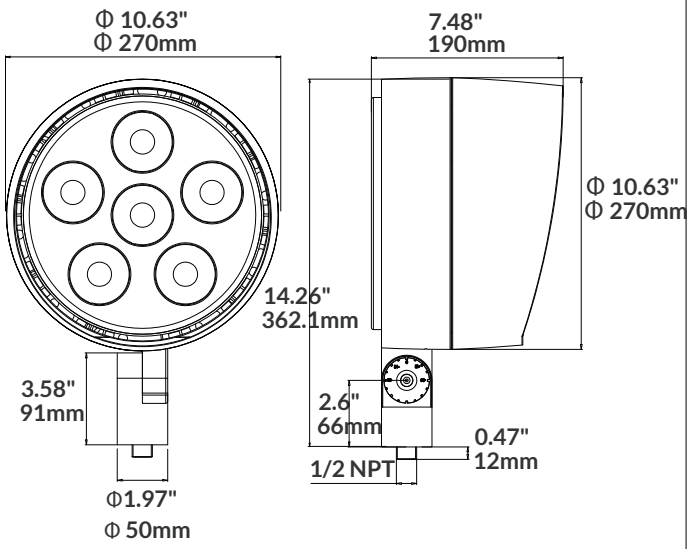

©2026 ABOVE ALL Lighting, Inc. All rights reserved.