PURE LIGHT
Focus

ABOVE ALL
www.AboveAllLighting.com

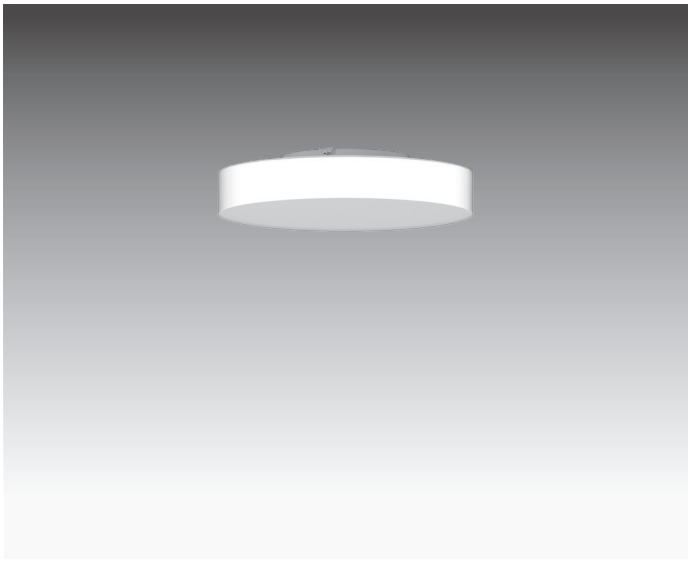

Family Product



FEATURES

- **Unique Light Distribution:** Provides three-sided illumination for uniform lighting.
- **Robust Construction:** Features efficient thermal design for durability.

The Pure Focus Light is a distinctive LED light featuring three-sided illumination. Constructed for optimal optical performance and heat dissipation, it offers high quality, uniform lighting with excellent efficacy.

TECHNICAL DATA

Wattage	15W, 25W, 40W, 90W, 180W
CRI	90
SDCM	<6
Driver	0-10V dimming
Input Voltage	120-277V, 50/60Hz
Projected Lifetime	L70-50,000 hours
Operating Temp.	-4°F to 104°F (-20°C to 40°C)
Certifications	ETL Listed
	RoHS Compliant
Power Factor	>0.9
Harmonic Distortion	<20%

Color Temperature

2700K 3000K 3500K 4000K RGBW

**RGBW models are made to order. Please contact the Customer Service for further information.*

PERFORMANCE DATA

Lumen values are measured by third party certified laboratories performed in accordance with IESNA LM-79-08 as well as Lighting Facts listed.

Wattage	Dia.	CCT	Lumen Output	Efficacy
15W	11.8"	3000K	1575 lm	105 lm/W
25W	15.7"	3000K	2625 lm	105 lm/W
40W	23.6"	3000K	4200 lm	105 lm/W
90W	35.4"	3000K	9450 lm	105 lm/W
150W	47.2"	3000K	15750 lm	105 lm/W
180W	47.2"	3000K	18900 lm	105 lm/W

NOTE:

1. Listed lumen outputs are nominal. For precise photometric data, refer to the IES files.

©2026 ABOVE ALL Lighting, Inc. All rights reserved.

ORDERING INFORMATION

EXAMPLE: PUFR-24-40-30901-ACPMK

PUFR						
Series	**Diameter - Wattage**	**CCT[3]**	**CRI**	**Voltage**	**Control**	**Mounting**
PUFR Pure Focus	**12-15** Ø11.8" - 15W/1575lm **16-25** Ø15.7" - 25W/2625lm **24-40** Ø23.6" - 40W/4200lm **36-90** Ø35.4" - 90W/9450lm **47-150** Ø47.2" - 150W/15750lm **47-150 is not available for ACPMK mount.*	**27** 2700K **30** 3000K **35** 3500K **40** 4000K	**90** CRI90	**1** 120-277V	**BLANK** 0-10V Dimming	**ACPMK[1&2]** Central Canopy Aircraft Cable Suspended **ACPMK is not available for the **47-150** model.* **SM** Surface Mount
	47-180[2] Ø47.2" - 180W/18900lm	**27** 2700K **30** 3000K **35** 3500K **40** 4000K	**90** CRI90	**1** 120-277V	**BLANK** 0-10V Dimming	**DPMK[1&2]** Direct Aircraft Cable Suspended

NOTE:

1. The standard cable length for suspended mount is 4.9ft (1.5m). Custom cable lengths available upon request. Setup fees may apply. Please contact the Customer Service for details.
2. ACPMK is the standard mounting method for the 15W/25W/40W/90W models. DPMK is the standard mounting method for the 180W model. Please contact Customer Service for special requirements.
3. RGBW option available. Please contact the Customer Service for further information.

©2026 ABOVE ALL Lighting, Inc. All rights reserved.

SPECIFICATION

Direct Aircraft Cable Suspended

Suspension Cable Length: 4.9ft (1.5m)

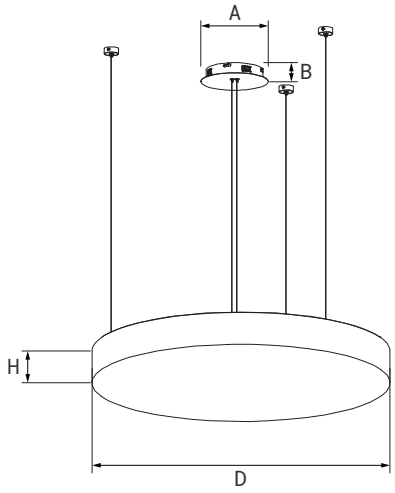

Central Canopy Aircraft Cable Suspended

Suspension Cable Length: 4.9ft (1.5m)

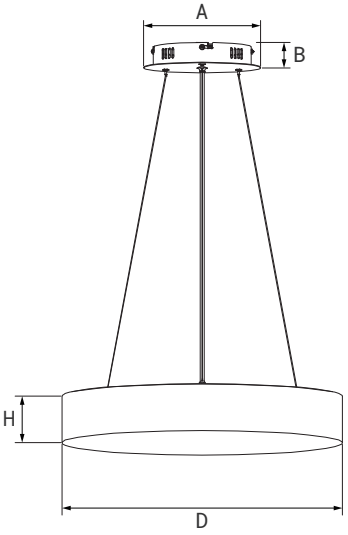

NOTE:

1. Custom cable lengths available upon request. Setup fees may apply. Please contact the Customer Service for details.

Model	Wattage	D	H	A	B
ACPMK	15W	11.8"(300mm)	3.1"(80mm)	10.0"(250mm)	1.38"(35mm)
ACPMK	25W	15.7"(400mm)	3.1"(80mm)	10.0"(250mm)	1.38"(35mm)
ACPMK	40W	23.6"(600mm)	3.1"(80mm)	10.0"(250mm)	1.38"(35mm)
ACPMK	90W	35.4"(900mm)	3.1"(80mm)	10.0"(250mm)	1.38"(35mm)
DPMK	180W	47.2"(1200mm)	3.1"(80mm)	13.8"(350mm)	1.38"(35mm)

Surface Mount

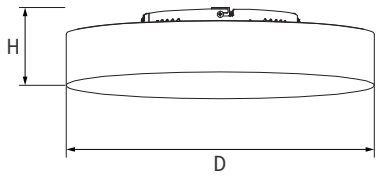

Model	Wattage	D	H
SM	15W	11.8"(300mm)	4.9"(125mm)
SM	25W	15.7"(400mm)	4.9"(125mm)
SM	40W	23.6"(600mm)	4.9"(125mm)
SM	90W	35.4"(900mm)	4.9"(125mm)
SM	150W	47.2"(1200mm)	4.9"(125mm)

©2026 ABOVE ALL Lighting, Inc. All rights reserved.

PHOTOMETRY

All published luminaire photometric testing performed to IESNA LM-79-08 standards by a NVLAP certified laboratory. IESNA LM-79-08 specifies the entire luminaire as the source resulting in a fixture efficiency of 100%. Results may vary per actual order.

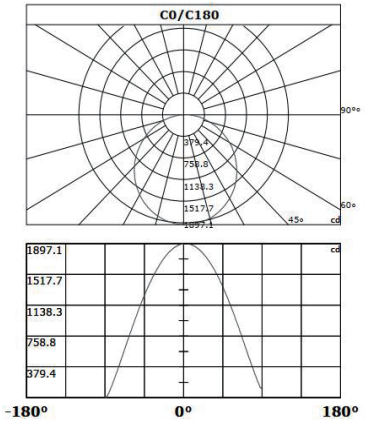

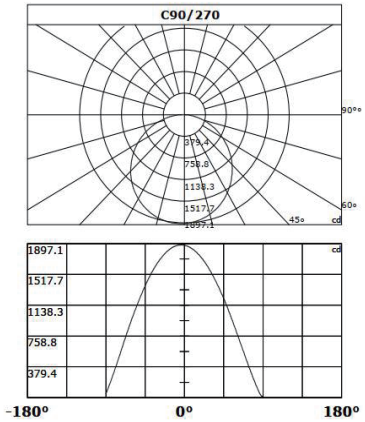

Height	Center lx	Diameter
1.m	1882.88 lx	323.20cm
2.m	470.72 lx	646.39cm
3.m	209.21 lx	969.59cm
4.m	117.68 lx	1292.79cm
5.m	75.32 lx	1615.98cm
6.m	52.30 lx	1939.18cm
7.m	38.43 lx	2262.37cm
8.m	29.42 lx	2585.57cm
9.m	23.25 lx	2908.77cm
10.m	18.83 lx	3231.96cm
11.m	15.56 lx	3555.16cm
12.m	13.08 lx	3878.36cm
13.m	11.14 lx	4201.55cm
14.m	9.61 lx	4524.75cm
15.m	8.37 lx	4847.95cm
16.m	7.35 lx	5171.14cm

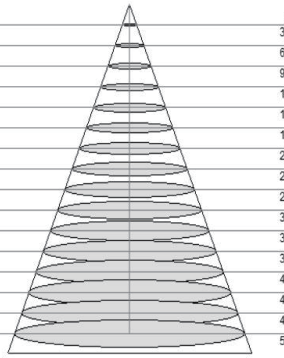

WARRANTY

5 years limited warranty.
Specifications subject to change without notice.

©2026 ABOVE ALL Lighting, Inc. All rights reserved.