VENUS LED POST TOP

ABOVE ALL
www.AboveAllLighting.com



MOUNTING



Twins Heads or More Heads Mount

PERFORMANCE DATA

Lumen values are measured by third party certified laboratories performed in accordance with IESNA LM-79-08 as well as Lighting Facts listed.

Nominal Wattage	Lumen Output	CCT	Distribution Type	CRI
25W	2250lm	3000K	Type V	>70
40W	3350lm	3000K	Type V	>70
60W	4560lm	3000K	Type V	>70

The Venus LED Post Top has an elegant , slim and compact appearance. Pleasing to the eye, it adds architectural structure to any outdoor space. A fine example of pedestrian-scale lighting design offering both confort and security to the site. Choose a single head, twin heads or more to be combined on a single pole and individually positioned with a pole binding mounting bracket for each head.

TECHNICAL DATA

Wattage	25W, 40W, 60W
CRI	70-Standard
	80-Optional
CCT	3000K, 4000K, 5000K
Input Voltage	120-277VAC, 50/60Hz
Operating Temp.	-40°F to 104°F(-40°C to 40°C)
Certifications	cETL Listed
	RoHS compliant
Power Factor	>0.9 at full load
Harmonic Distortion	<20% at full load
Projected Lifetime	L70 - 100,000 Hours
IP Rating	IP65
EPA (Pole not included)	0.44ft² (single head)
	0.89ft² (twins heads)

FEATURES

- **Slim & Compact Design:** Sleek and compact appearance that enhances the architectural aesthetics of outdoor spaces.
- **Durable Construction:** Die-cast aluminum housing for long-lasting outdoor performance.
- **Pole Compatibility:** Pole binding mount for 4" pole.
- **Surge Protection:** 10kA surge suppression protection available.

©2026 ABOVE ALL Lighting, Inc. All rights reserved.

ORDERING INFORMATION

EXAMPLE: VSPT40401-PBM-V-BK

VSPT							
Series	Wattage	CCT	Voltage	Control	Installation	Distribution	Finish
VSPT	**25** 25w **40** 40w **60** 60w	**30** 3000K **40** 4000K **50** 5000K	**1** 120-277V	**BLANK** On/Off	**PBM** 4" Pole Binding Mount	**V** Type V	**BK** Black RAL#9005[2] **BZ** Bronze RAL#8019[2]

NOTE:

1. Driver need to be mounted remotely in the pole.
2. Standard Finish is Black and Bronze. Custom colors might be available for an additional fee. Please check with Customer Service for more information.

ACCESSORIES (ORDER SEPARATELY)

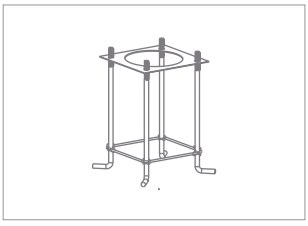

ABMK-M16-7.8

Galvanized Anchor bolts mounting kits for round pole up to 18FT. Mounting hole 7.8"x7.8", M16x19.7"(500mm)

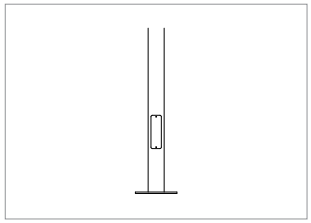

GSRP4-14FT-0.098-BK[1]

Galvanized steel round pole Ø4.25"(108mm), 14ft height, wall thickness: 0.098" (2.5mm), black.

NOTE:

1. Pole length and finish color can be customized.

DIMENSION

Projection Detail (Not to Scale)

Pole Binding Mount

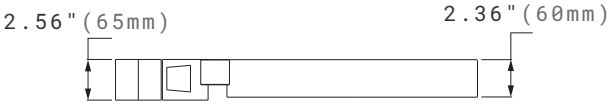

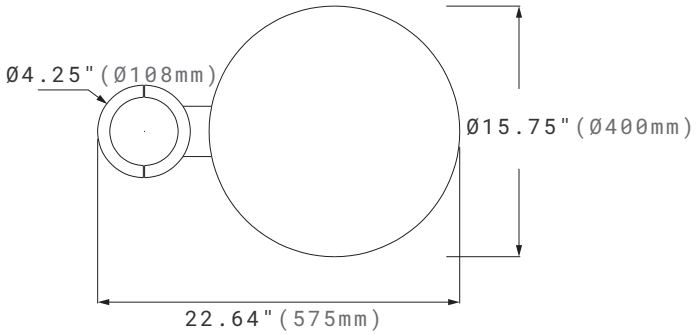

©2026 ABOVE ALL Lighting, Inc. All rights reserved.

DIMENSION

Projection Detail (Not to Scale)

Single Head Mount

Thickness: 0.098"

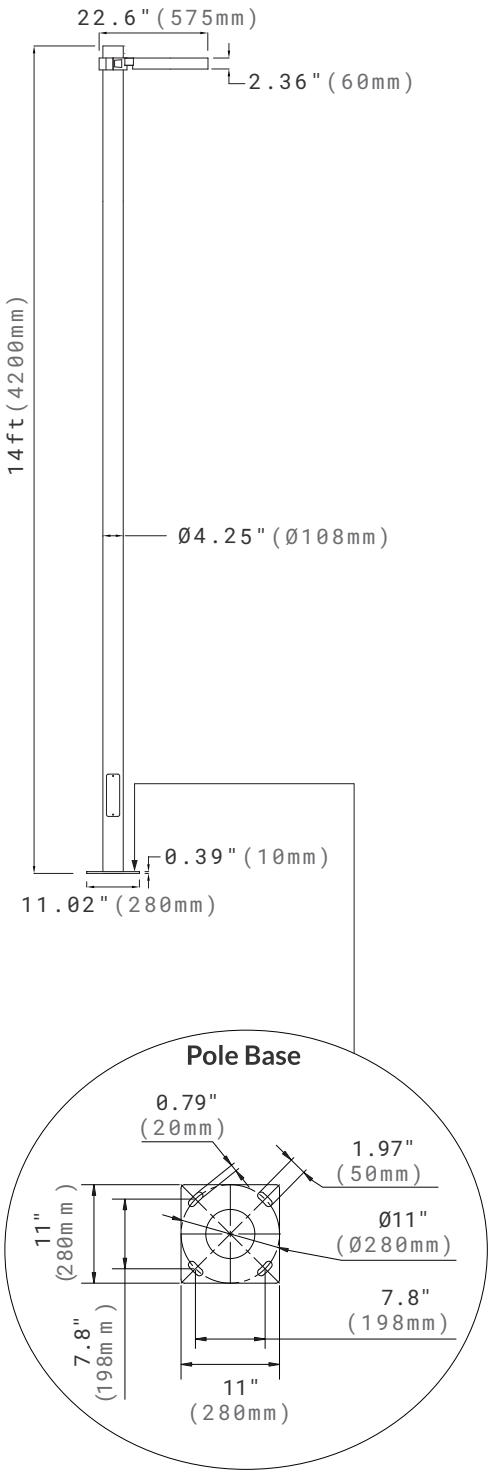

Twins Heads Mount

Thickness: 0.098"

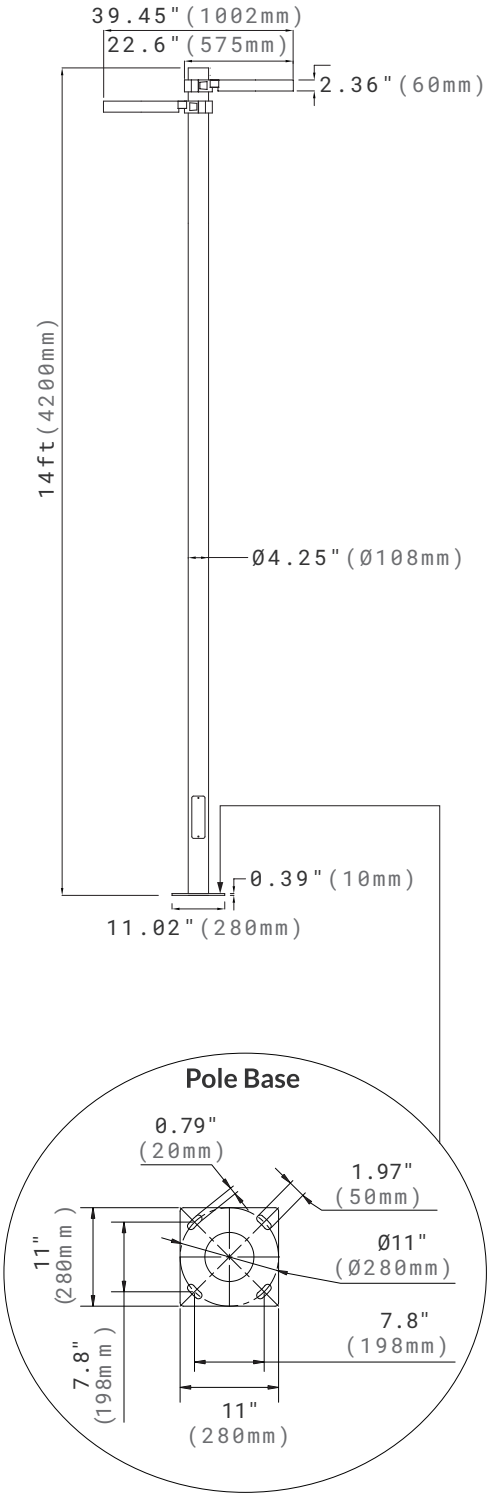

©2026 ABOVE ALL Lighting, Inc. All rights reserved.

DIMENSION

Anchor Bolt Plate

Use caution when setting anchor bolts. Bolts must be vertically straight and centered on dimensions shown.

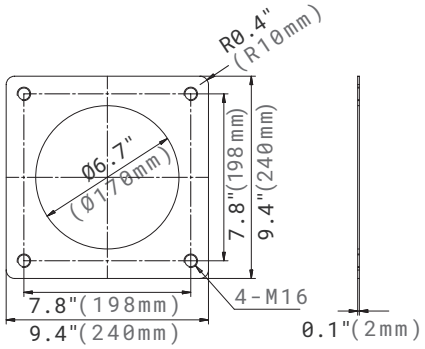

Note: Adequate drainage must be provided in concrete foundation.

Anchor Bolt Detail

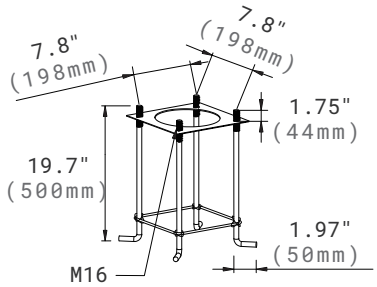

Effective Project Area

Mounting Arm	Tilt Angle	EPA
Single Head 	0°	0.44ft²
Twins Heads 	0°	0.89ft²

POLE DATA CHART

Pole Height	Wall Thicknes	Pole Diameter (O.D.)	Pole Material	Pole EPA	Max Basic Wind Speed
14ft	0.098"	Ø4.25"	Galvanized Steel	0.89ft²	150 mph

Notes:

1. The wind speed datas are based on allowable design wind speed (VASD).
2. Rated performance is dependant upon the pole being properly attached to a supporting foundation of adequate design.

©2026 ABOVE ALL Lighting, Inc. All rights reserved.

BUG RATING TABLE

Performed to IESNA LM-79-08 standards by a NVLAP accredited laboratory.

Model	BUG Rating
VSPT25301-PBM-V-BK	B1-U0-G1
VSPT40301-PBM-V-BK	B1-U0-G1
VSPT60301-PBM-V-BK	B2-U0-G1

WARRANTY

5 years limited warranty.
Specifications subject to change without notice.

©2026 ABOVE ALL Lighting, Inc. All rights reserved.